Instructions for use

HOME DELUXE
WIR MACHEN DEIN ZUHAUSE

Freestanding whirlpool OVALO PLUS

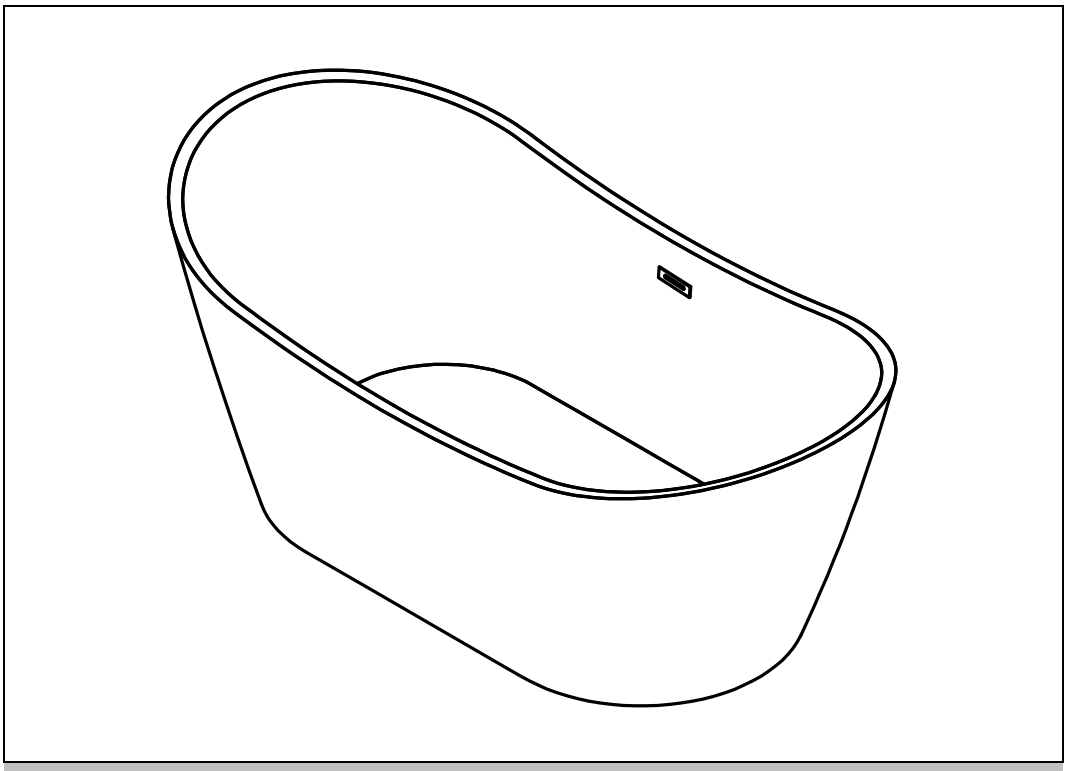

Original instructions for use

ATTENTION:

Read the instructions thoroughly and carefully before installation and use. They contain important information on installation and use.

IMPORTANT:
KEEP FOR FUTURE REFERENCE.
READ CAREFULLY!

Table of contents

1. General ... 3
1.1. Product overview ... 3
1.2. General information ... 3
1.3. Warranty ... 3
2. Information on the instructions for use ... 4
2.1. Availability of the instructions for use ... 4
2.2. Target groups for the instructions for use ... 4
2.3. Information about the translation ... 4
2.4. Explanation of symbols ... 4
2.5. General information about the instructions for use ... 5
2.6. Intended use ... 5
2.7. General safety instructions ... 6
3. Product features ... 7
3.1. Technical data ... 7
3.2. Product description ... 8
4. Scope of delivery ... 8
5. Installation ... 8
5.1. Safety instructions ... 8
5.2. Product structure ... 9
6. Application ... 12
6.1. Safety instructions ... 12
6.2. Initial commissioning ... 13
6.3. Operation ... 13
6.4. Control elements ... 14
6.5. Storage location ... 14
7. Troubleshooting ... 15
8. Maintenance and care ... 15
8.1. Safety instructions ... 15

9. Disassembly 16
9.1. Safety instructions 16
10. Disposal 16
10.1. General information 16
11. Electrical and electronic equipment – information for private households 17

Dear Customer,

Thank you for choosing a product from **Home Deluxe GmbH**. We hope you enjoy your new OVALO PLUS.

The operating instructions will help you with the assembly, commissioning, operation and maintenance of the product. The operating instructions and safety instructions must be read carefully and in full. Follow these instructions to avoid hazards.

1. General

1.1. Product overview

Model: Freestanding whirlpool OVALO PLUS | Item ID: 11823 | Variant ID: 9882

1.2. General information

In order to meet our standards, we are constantly improving quality, simplifying assembly and operation, and adapting products to customer requirements. Due to these changes, the current version of the instructions for use can be found on our website.

The term "product" is used in the operating instructions for the "OVALO PLUS".

1.3. Warranty

The statutory liability for defects and warranty rights apply from the date of purchase.
Home Deluxe GmbH accepts no liability for damage caused by failure to follow the instructions for use. Complaints arising from improper assembly or use are excluded from the warranty. In the event of defects in the product, please contact our customer service in writing using the contact form on our website, stating the product name, serial number and a photo of the type plate:

Home Deluxe GmbH
Schanzeweg 2
32312 Lübbecke
Germany
Tel. +49 (0)5743 6181-0
www.home-deluxe-gmbh.de

If you have any further questions, please do not hesitate to contact our customer service team using the contact form.

2. Information about the instructions for use

2.1. Availability of the instructions for use

The instructions for use are part of the product and should be kept complete and in the immediate vicinity of the product.

2.2. Target groups for the instructions for use

The instructions for use must be read and observed by every person involved in any of the following activities or use:

- Unpacking
- Assembly/installation
- Commissioning/operation
- Maintenance/testing/care
- Troubleshooting/repair
- Disposal

2.3. Information about the translation

The original operating instructions were written in German. Any other languages available are translations of the German version.

2.4. Explanation of symbols

Symbol	Explanation of symbols
	**WARNING** This symbol indicates potential hazards that could result in fatal or serious injury. Read the relevant instructions before carrying out the corresponding installation or application step.
	**INFO** This symbol indicates important information and points out potential damage to property. Please read this information before carrying out the relevant assembly or application step in order to understand any problems and avoid damage.
	**CE marking** This symbol indicates that the product complies with the applicable requirements imposed by the European Community. The current declaration of conformity is available on request from Home Deluxe GmbH.
	**For indoor use only** This symbol indicates that the product may only be used indoors.
	**Read the instructions for use** This symbol indicates that the instructions for use must be read carefully before assembling/installing and/or operating the device.
	**Disposal of electrical and electronic equipment** Electrical and electronic equipment must not be disposed of with household waste!

Symbol	Explanation of symbols
	**No diving** This symbol indicates that diving into the water is prohibited. Collisions with other people in the water are possible.
	**Do not touch the jets** This symbol indicates that you must not touch the jets.
	**Warning of electrical voltage** This symbol indicates that you must not come into contact with electrical voltage.
	**Supervise children in water facilities** This symbol indicates that children must be supervised by adults in water facilities.
	**Protection class I** This symbol indicates that all conductive parts of the equipment must be connected to the protective conductor system of the fixed electrical installation. This is a protective earth connection. In the event of a fault current, a fuse disconnects the circuit from the power supply.
	**Alternating current** This symbol indicates that the product is operated with alternating current.

2.5. General information about the operating instructions

The operating instructions refer to the freestanding OVALO PLUS whirlpool. They contain important information on installation, operation, maintenance and cleaning. The operating instructions, in particular the safety instructions, must be read carefully before using the product. Keep the operating instructions in a safe place. Only use the product as described in these operating instructions to avoid accidental injury or damage. If you pass the product on to a third party, these operating instructions must also be handed over.

2.6. Intended use

The product is high-quality, durable and intended and suitable exclusively for private use within reasonable and normal limits. Furthermore, our product is **not** intended for commercial use. Commercial use is only permitted with the written consent of Home Deluxe GmbH.

The product is an indoor whirlpool for bathing and relaxation.

Only use the product as described in these instructions for use. Any other use is considered improper and may result in property damage or personal injury. The manufacturer accepts no liability for damage caused or resulting from improper or incorrect use.

2.7. General safety instructions

General hazard warnings



- Improper handling can result in serious personal injury and property damage. Therefore, assembly, installation, commissioning, troubleshooting, maintenance and repair work may only be carried out by qualified persons.
- The product can be used by children aged 8 years and above, as well as by persons with reduced physical, sensory or mental capabilities or lack of experience and knowledge, if they are supervised or have been instructed in the safe use of the device and understand the resulting dangers.
- **Only** assemble the product if the scope of delivery is complete and in perfect condition.
- Ensure that all parts are undamaged and correctly assembled. Incorrect assembly may result in injury. Damaged parts may affect safety and function.
- **Danger to life due to electrical voltage!** No electrical devices may be placed in the immediate vicinity of the product.
- **Danger to life due to electrical voltage!** No electrical devices may be placed inside the product.
- Only place the product on a non-slip, level and firm surface.
- Do not make any modifications to the product.
- Check the fastenings at regular intervals.
- If any components and/or cables are defective, the product must not be used any longer. Contact our customer service department or a qualified specialist to have the defect repaired.

Danger to children



- Keep children away from packaging materials. Among other things, there is a risk of suffocation!
- Keep children away from the assembly site while the product is being assembled. The scope of delivery includes small parts that could be swallowed or cause serious injury.
- **Risk of tipping!** The product is not a children's toy or sports equipment. The product could tip over if weight is applied to one side, which could result in death.
- Do not place the product directly in or near a play area.
- Explain to children how to use the product correctly and never leave them unattended while playing.
- Remove all sharp objects from the vicinity of the product. Ensure that children playing are not at risk.
- Ensure that small children do not put small parts in their mouths.

Risk of injury
Improper use of the product may result in injury.



- Check the product for visible damage before each use.
- Do not make any structural changes to the product. Any changes must be approved in writing by the manufacturer and carried out in accordance with the instructions.
- The product must not be used if it is damaged. Damaged parts must be repaired or replaced with original spare parts.
- Ensure that the product is permanently and securely installed to prevent injury.
- **Danger to life due to electrical voltage and fire hazard**: To avoid danger, all installation and maintenance work must be carried out by a qualified electrician in accordance with national and local electrical regulations and procedures.
- If the power cord is damaged, take the product out of service until the power cord has been

replaced by the manufacturer, customer service or a qualified electrician.

- **Danger to life due to electrical voltage**: Contact with live parts poses an immediate danger to life. Damage to the insulation or individual components can be life-threatening. -> If the insulation is damaged, switch off the power supply immediately and arrange for repairs.

Risk of damage



- Improper handling of the product can lead to damage.
- Installation, repair and maintenance work on the water and electrical connections may only be carried out by qualified and authorised installation and electrical specialists in accordance with national and local regulations.
- Only install the product on a sealed floor, e.g. with liquid foil.
- Do not open the packaging with sharp objects (e.g. knives, scissors or similar), as this may damage the product. Be careful when opening.
- If you open the packaging carelessly with a knife or other sharp objects, the product may be damaged. Proceed with extreme caution when opening.
- Do not climb on the product, as there is a risk of falling.

Explosion hazard



- **Caution:** Do not store highly flammable, combustible or explosive substances inside the product. Highly flammable substances may catch fire.

3. Product features

3.1. Technical data

OVALO PLUS whirlpool	
External dimensions (L x W x H)	1800 x 900 x 720 mm
Water capacity	max. 285 l
Empty weight	55 kg
Input voltage	220–240 V AC
Frequency	50 Hz
Rated power	900 W
Rated current	max. 4.1 A
Protection class	I
Noise level	approx. 50 dB(A)
Cable length (from pump)	approx. 1500 mm

Dimensions

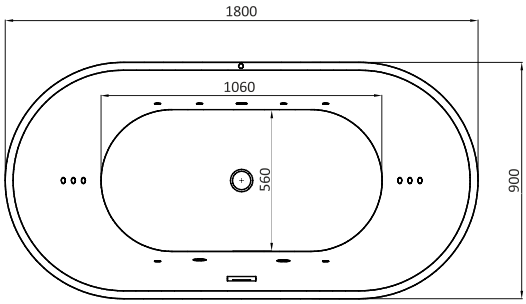

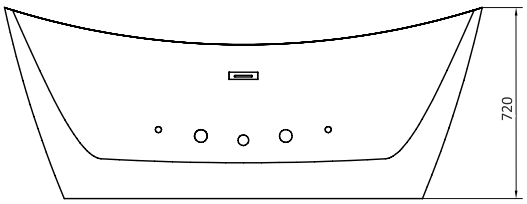

3.2. Product description

This spacious, ergonomically shaped whirlpool is the perfect solution for your bathroom and leaves nothing to be desired. The water jets make the relaxation experience perfect. Underwater LED lighting creates a magical atmosphere. Of course, it can also be used as a normal bathtub. The modern design and uncomplicated functionality round off the bathing experience. Not only are the features outstanding, but the quality is also worth highlighting. The adjustable feet of the whirlpool adapt to any surface and make installation possible in many locations.

4. Scope of delivery

Upon delivery, check the packaging for external damage. Furthermore, immediately after unpacking, check the scope of delivery for completeness and the perfect condition of the product and all components. Only assemble the product if the scope of delivery is complete and undamaged.

Components/parts

No.	Description	Quantity	Illustration
1.	Whirlpool	1	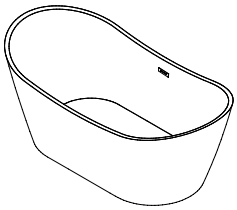
2.	Siphon	1	
3.	Sealing plug	1	

5. Assembly

5.1. Safety instructions

All information regarding safety and health must be read.

Risk of injury

Improper handling during assembly can result in injury.



- Your product will be delivered in a package. Please ensure that the package is opened at the top. Be very careful when opening the package, as it contains fragile parts.
- Only place the product on a non-slip, level and firm surface.
- Ensure that small children do not put small parts in their mouths.

- The electrical connections may only be installed by qualified and authorised electricians.
- The installation of water connections must be carried out by qualified and authorised plumbing specialists.
- Installation errors or damage caused by installation are excluded from the warranty.
- At least 2 people are required to assemble the product.
- Wear protective clothing such as safety shoes and protective gloves during assembly.
- **Please note that Home Deluxe GmbH does not cover any costs for assembly or skilled labour, such as electrician costs or similar specialist costs.**
- **Please note that our company does not have its own service or technical team . The customer is responsible for proper assembly and connection work.**

5.2. Assembly of the product

The product is delivered disassembled and can be assembled with minimal effort. Follow the assembly instructions carefully. Failure to do so may compromise the function and safety of the product.

Required tools and consumables

	Screwdriver		Pencil
	Spirit level		Measuring tape
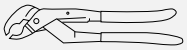	Pipe wrench		Cutter knife
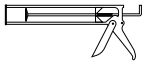	Caulking gun	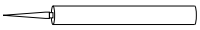	Sealant
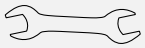	Spanner		Plumbing sealant tape

Required tools and consumables

- The following instructions must be read carefully.
- Before installing the product, carefully clean the floor; it must be free of dust.
- Seal the floor before installing the product, e.g. with liquid sealing foil.
- Installation and connection must always comply with current local regulations!

Installation of freestanding bathtubs

Freestanding bathtubs should generally be installed on a fully tiled and sealed floor. This product is only sealed to the floor, leaving a section of the joint free so that any leaks can be quickly detected, thus preventing major water damage.

Information on the electrical connection

The electrical connection may only be carried out by qualified personnel (electricians) in accordance with DIN VDE 0100. The installation of a 30 mA residual current circuit breaker is mandatory. The product's earth cable must be connected to the house earth and must be protected separately in the house fuse box with a 16 A fuse. National and local regulations must be observed. The voltage and frequency values specified by the manufacturer must be observed.

Information on leak testing

To prevent unwanted water leakage or damage, a leak test should be carried out before final installation.

- Before final installation, check
  - that all flexible hoses and clamps on water-carrying components are securely connected. If the clamp or connection can be moved, it must be tightened with a suitable tool.
  - that the connected pipes are tight. To do this, fill the tub halfway with water and first check that the plug closes securely. If this is OK, drain the water. Check that all pipe connections are cleanly connected and sealed.
  - If any of the connections are leaking, the fault must be rectified and the leak test repeated until everything remains dry.

Assembling the product

First remove all protective films from the components. Check the packaging contents for completeness and possible damage.

Illustration	Assembly step
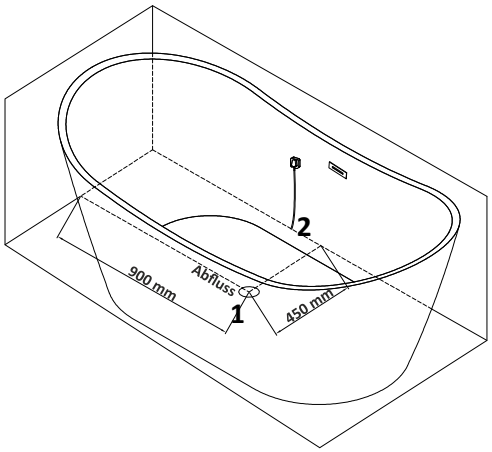	**Step 1: Installation dimensions** - The dimensions are for reference **only**. The installation dimensions can be found directly on the product. - The following positioning of the water and power supply is recommended for standard operation of the product. - Water drain (**1**) - Power supply (**2**)

Illustration	Installation step
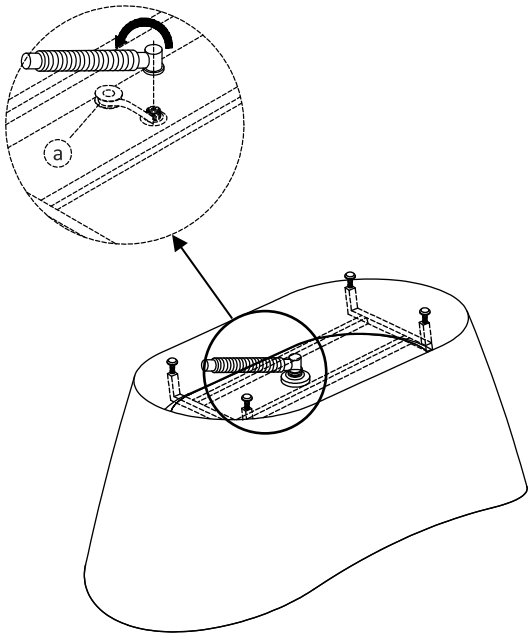	**Step 2: Install the siphon** - Turn the product upside down and install the siphon on the drain. **Recommendation:** To seal the drain**,** wrap it with sanitary sealing tape (**a**) or hemp. - Then install the siphon on the drain, align it in the direction of the house drain and connect the drain pipe to the siphon.
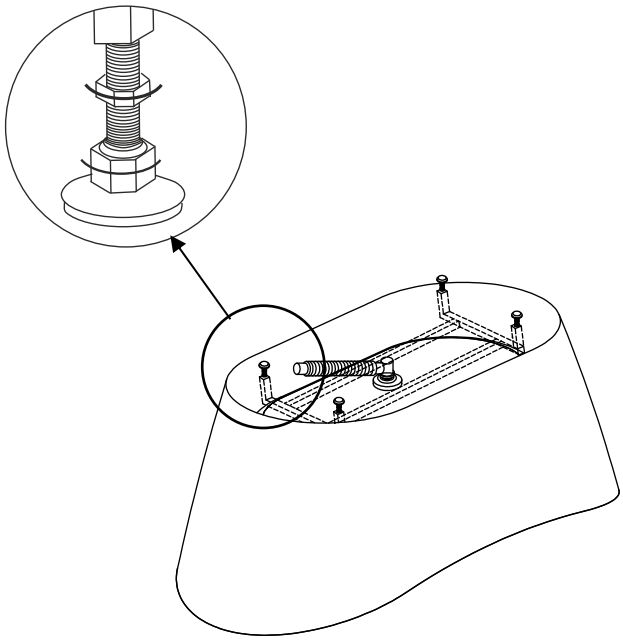	**Step 3: Align the product** - Use a spirit level to align all feet horizontally with each other. - The feet should be flush with the product cover. - The adjustment screws must be locked after alignment.

Illustration	Installation step

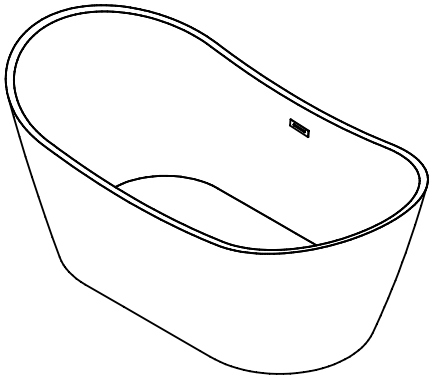	**Step 4: Set up the product**
	- Place the product in its intended location.
	- When placing the product, ensure that all feet are resting on the floor. If they are not completely flat, they must be readjusted.
	- Remove the mains plug from the product.
	- Plug the power cord into the socket, which must be splash-proof.
	- Perform a leak test (see above). To do this, the product must be switched on (see "Control element").
	- If all connections and the drain are tight, the product can be sealed to the floor (e.g. with silicone).
	- Only use the product if
	  ○ the feet are correctly adjusted, otherwise the water cannot drain completely.
	  ○ all water-carrying components are leak-proof.

6. Application

6.1. Safety instructions

The following safety and health information must be read carefully.

Risk of injury
Improper handling during operation can result in injury.



- Do not use a damaged product.
- Check the product for visible damage before each use; do not use the product if it is severely damaged.
- Clean the product thoroughly before first use, test all functions and familiarise yourself with its correct use.
- **Risk of slipping!** Be careful when getting in and out of the product.
- Do not use bath salts or oils when using the product, as these can build up on the jets and in the pipes and impair functionality.
- **Danger of death due to electrical voltage**: Do not take any electrical devices into the tub and do not place them within immediate reach.
- Avoid running the pump dry; the water level must always be above the jets when the whirlpool function is started.
- Do not take animals into the product for bathing or showering, as the drain (siphon) or jets may become clogged with hair.
- Do not make any changes to the product.
- The product is not a toy; children are not permitted to play with it.

- Children may only use the product under the supervision of an adult who has been instructed in its use and is familiar with the warning notices.
- Operating errors or damage caused by incorrect operation are excluded from the warranty.
- Improper handling of the product may result in damage and void the warranty.
- Switch off the device after use.

6.2. Initial start-up

Before using the product for the first time, check it for damage and leaks. The product may only be used if it is undamaged and properly sealed.

6.3. Operation

Before using the product, check that

- that it is in proper working order.
- the electrical connection.
- the water connection
- the water jets
- the drain
- the function of the LED lighting.

Switching the product on/off

Press the on/off switch (**3**) once to switch on the whirlpool function.

Press the on/off switch (3) again to turn off the whirlpool function.

6.4. Controls

Operation and functions

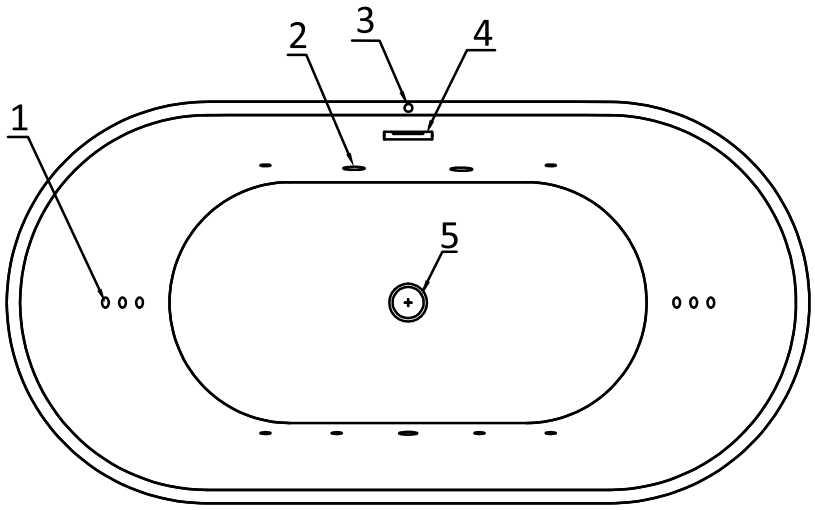

No	Designation	Number
1	Water jet nozzles	12
2	Underwater LED lighting	3
3	On/off switch	1
4	Water overflow	1
5	Drain	1

6.5. Storage location

- When storing, do not knock over or stack the device.
- Do not store outdoors.

Note

To avoid a short circuit or tripping of the RCD plug, we strongly recommend connecting the product to a separately fused circuit. Overloading can occur if several electrical appliances are operated simultaneously on the same circuit or if an extension cord is used. Please note this recommendation when installing your whirlpool, sauna or infrared cabin. For more information, please refer to the installation instructions and technical data.

7. Troubleshooting

If the following faults occur during operation, please check the following causes of faults using the table below. If the fault cannot be rectified using the measures listed, take the product out of service.

Fault	Possible cause	Solution
The product wobbles or vibrates	- The product is standing on an uneven surface - Adjustable feet not correctly aligned	- Place the product on a level surface - Align the adjustable feet
Water pump/nozzles not working	- Power supply disconnected - Circuit breaker has tripped - Water pump is clogged, blocked or defective - Water pump is defective	- Check or restore power supply - Check the RCD - Contact customer service - Contact customer service
LED does not switch on or off	- Power supply disconnected - LED defective	- Check or restore power supply - Contact customer service
Product is not level	- Adjustable feet not correctly aligned	- Align the feet
Product is leaking water and standing on the floor	- Seal defective - Drain leaking - Clamps on water-carrying components have come loose	- Contact customer service - Clean the drain (siphon) - Tighten clamps
Water is flowing under the product	- Seal to the floor is damaged	- Check seal, reseal if necessary

If you encounter any further problems with the product, please contact us.

8. Maintenance and care

8.1. Safety instructions

Risk of injury
Improper handling during operation can result in injury



- Before cleaning/maintenance/care, switch off the power supply to the product.
- Repair and maintenance work on the water and electrical connections may only be carried out by qualified and authorised installation and electrical specialists. We accept no liability for damage caused by improper handling and/or repairs, and warranty claims will be void.
- Clean the product with a mild detergent and a soft cloth. Acetone or ammonia-based cleaning agents and coarse-grained abrasives are not suitable.
- Clean the nozzles if they become clogged with hair.
- Clean the drain (siphon) at regular intervals. Do not do this during or shortly after operation!
- Limescale and water stains can be removed with diluted citric or acetic acid.

9. Disassembly

9.1. Safety instructions

Risk of injury
Improper handling during disassembly can result in injury.



- **Danger to life due to electrical voltage**: Disconnect the product from the power supply before dismantling. Contact with live components may result in electric shock, which can cause burns or death.
- The product is heavy and large; at least two people are required for disassembly.

Disassembly of the product must be carried out in reverse order to assembly. (**see chapter on assembly**)

10. Disposal

10.1. General information



- Dispose of the product and all components in accordance with local and national regulations to avoid damage to the environment.
- Our packaging is made from environmentally friendly materials. It can be recycled and thus serve as a valuable raw material. Dispose of the packaging material (cardboard boxes, dirt packaging, etc.) separately and properly in accordance with the applicable national regulations.
- If you are unsure about disposal, contact the manufacturer.
- You can also obtain information on proper disposal from your local waste disposal centres.

11. Electrical and electronic equipment – information for private households

The Electrical and Electronic Equipment Act (ElektroG) contains a number of requirements for the handling of electrical and electronic equipment. The most important ones are summarised here.

1. Separate collection of waste equipment

Electrical and electronic equipment that has become waste is referred to as waste equipment. Owners of waste equipment must dispose of it separately from unsorted municipal waste. You must separate old batteries and accumulators that are not enclosed in the waste equipment, as well as lamps that can be removed from the waste equipment without causing damage, from the waste equipment before handing them in at a collection point. Separate waste equipment in order to prepare it for reuse.

2. Options for returning old appliances

Owners of waste equipment from private households can return it to the collection points of the public waste disposal authorities or to the return points set up by manufacturers or distributors in accordance with the Elektro G. An online directory of collection and return points can be found on the website: https://www.stiftung-ear.de or https://www.take-e-back.de.

3. Data protection notice

Old appliances often contain sensitive personal data. This applies in particular to information and telecommunications technology devices such as computers and smartphones. In your own interest, please note that each end user is responsible for deleting the data on the old appliances to be disposed of.

4. Take-back obligation of distributors

Distributors with a sales area for electrical and electronic equipment of at least 400 m2 and distributors of food with a total sales area of at least 800 m2 who offer and make available electrical and electronic equipment on the market several times a calendar year or on a permanent basis are obliged

- when a new electrical or electronic device is sold to an end user, take back, free of charge, an old device of the same type belonging to the end user, which performs essentially the same functions as the new device, at the point of sale or in the immediate vicinity thereof, and
- at the end user's request, take back old appliances that are no larger than 25 cm in any external dimension free of charge at the retail store or in the immediate vicinity; the take-back may not be linked to the purchase of an electrical or electronic appliance and is limited to three old appliances per type of appliance.



5. Meaning of the "crossed-out wheelie bin" symbol

The symbol of a crossed-out wheelie bin, which is regularly displayed on electrical and electronic equipment, indicates that the respective device must be collected separately from unsorted municipal waste at the end of its service life.

- Manufacturer registration number
- As a manufacturer within the meaning of the ElektroG, we are registered with the responsible foundation Elektro-Altgeräte Register (Nordostpark 72, 90411 Nuremberg) under the following registration number: WEEE Reg. No. DE86467979

Home Deluxe GmbH
Schanzeweg 2
32312 Lübbecke
Germany
Tel. +49 (0)5743 6181-0
www.home-deluxe-gmbh.de

GA-056-00_OVALO PLUS
2023/02